KR 560 R3100-2

Technical data

Maximum reach	3100 mm
Rated payload	560 kg
Maximum payload	681 kg
Maximum supplementary load, rotating column / link arm / arm	-
Pose repeatability (ISO 9283)	± 0.08 mm
Number of axes	6
Mounting position	Floor
Footprint	968 mm x 944 mm
Weight	approx. 2170 kg

Axis data

Motion range	
A1	±185 °
A2	-130 ° / 20 °
A3	-100 ° / 165 °
A4	±350 °
A5	±120 °
A6	±350 °
Speed with rated payload	
A1	90 °/s
A2	80 °/s
A3	75 °/s
A4	90 °/s
A5	90 °/s
A6	130 °/s

Operating conditions

Ambient temperature during operation	0 °C to 55 °C (273 K to 328 K)

Protection rating

Protection rating (IEC 60529)	IP65
Protection rating, robot wrist (IEC 60529)	IP65 / IP67

Controller

Controller	KR C5

Certificates

ESD requirements	IEC61340-5-1; ANSI/ESD S20.20

Workspace graphic

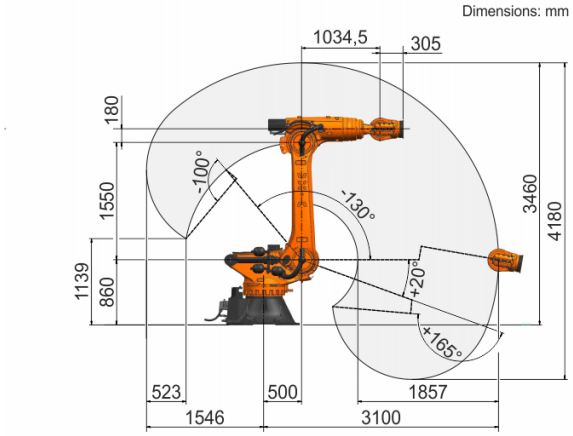

Payload diagram

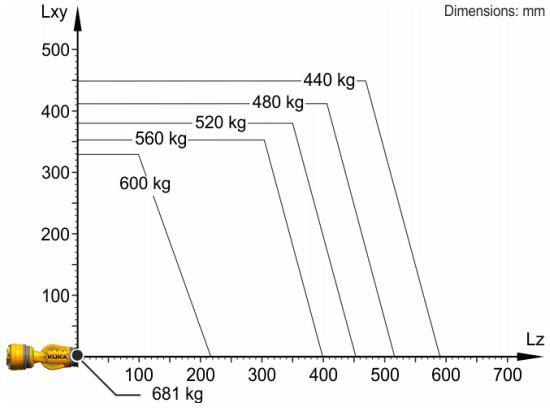

The KR 560 R3100-2 is designed for a rated payload of 560 kg in order to optimize the dynamic performance of the robot. With reduced load center distances and favorable supplementary loads, a maximum payload of up to 681 kg can be mounted. The specific KUKA Load case must be verified using KUKA. For further consultation, please contact KUKA Service.

Mounting flange

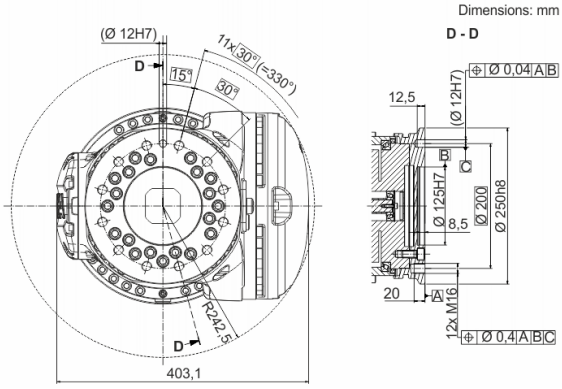

Details provided about the properties and usability of the products are purely for information purposes and do not constitute a guarantee of these characteristics. The extent of goods delivered and services performed is determined by the subject matter of the specific contract. No liability accepted for errors or omissions.
0000-391-562 / V1.1 / 11.04.2023 / en
KUKA Deutschland GmbH Zugspitzstrasse 140, 86165 Augsburg, Germany. Tel.: +49 821 797-4000, www.kuka.com